Riva Vision Midi Wood Burning Stoves & Multi-fuel Stoves

Featuring the same clean, geometric form and reflective detailing, the Stovax Riva™ Vision Midi stove offers an impressive heat output of up to 6.5kW.

Available in wood burning or multi-fuel models, the Riva™ Vision Midi stove offers many optional extras including the external air kit allowing air to be drawn from the outside, minimising drafts in your room as well as a gloss black flue pipe to really personalise your stove.

The addition of a Riva™ Bench can really extend your individual styling options.

KEY FACTS

Brand Stovax

Woodburner - Yes

Multi-fuel - Yes

Maximum efficiency 81%

Nominal heat output and range (Wood burning version) 5kW (2.5 - 7kW)

Nominal heat output and range (Multi-fuel version) 6.5KW (2.5 - 8.5kW)

Maximum log length 330mm (13")

Flue connection (internal diameter) 128mm (5")

Airwash - Yes

Cleanburn - Yes

Smoke Control Area approved* - Yes

Additional Coloured Frame Options - Yes

* When fitted with a Smoke Control Kit for multi-fuel models. The Riva Vision Midi Woodburning model is Smoke Control Approved as standard and does not require an additional Smoke Control Kit.

Sarsen Energy Ltd Unit 1 Garlands Trading Estate Cadley Road Collingbourne Ducis
Marlborough Wiltshire SN8 3EB
01264 850742
info@sarsenenergy.co.uk

RIVA VISION MIDI INFORMATION

Width	Height	Height (with plinth)	Depth	Weight	Nominal Heat Output & Range
416mm	513mm	613mm	350mm	70kg (wood burning) 90kg (multi-fuel)	5.0kW (wood burning) 6.5kW (multi-fuel) (2.5-8.5kW)

RIVA VISION

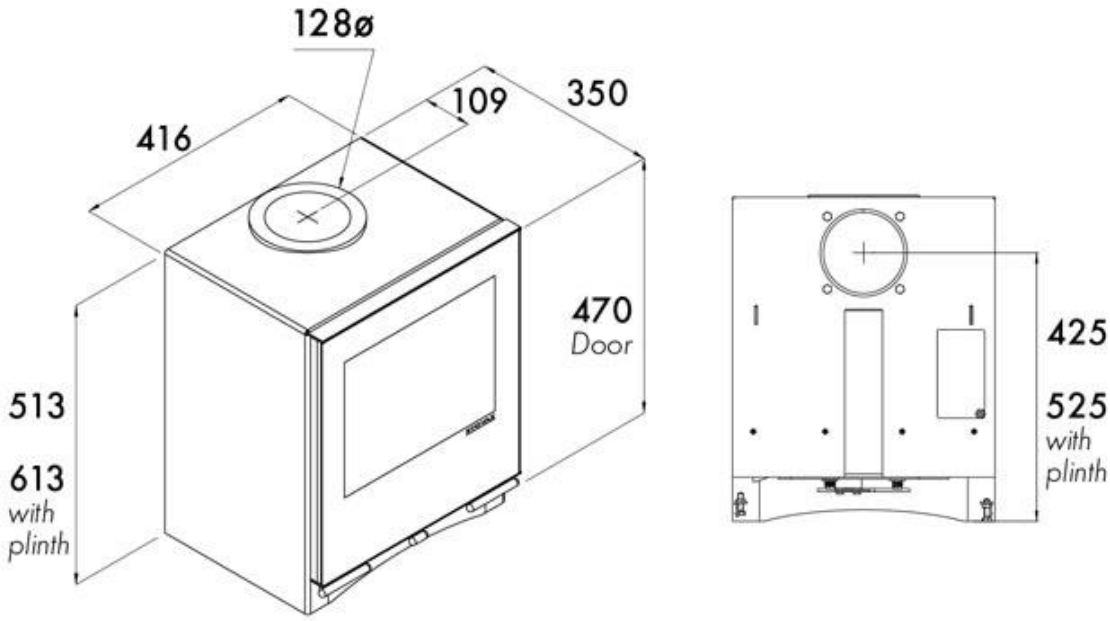

Sarsen Energy Ltd Unit 1 Garlands Trading Estate Cadley Road Collingbourne Ducis
Marlborough Wiltshire SN8 3EB
01264 850742
info@sarsenenergy.co.uk